WUNDERBAR

AWNING WINDOWS

WUNDERBAR
ALUMINIUM PRODUCTS
Windows, Doors & More

PH: (02) 6057 8888

Comdain Homes

Awning Window Range

If you want windows that can provide natural ventilation year-round and invite natural light into your home, Bradnam's **awning windows** are exactly what you've been looking for.

Essential Awning Windows

'**Essential**' awning windows are our standard aluminium awning window product. Packed full of benefits and features, they've been designed with modern living in every Australian climate firmly in mind. Our Essential awning windows are available in a range of standard configurations as well as custom designs.

Signature Awning Windows

Our '**Signature**' awning window range is a high-quality collection that includes both standard and oversize options so you can find the perfect window to suit your home's design and aspect. They can be combined with fixed windows to create feature windows or maximise natural light and your view.

Commercial Awning Windows

Bradnam's '**Commercial**' collection includes aluminium awning windows in small and large sizes. Aesthetically appealing and heavy duty, they're specifically designed for commercial environments or unique, high-end homes.

Performance Parameters

	Essential	Signature	Commercial
Frame size	52mm	100mm	100mm
Maximum panel height	2400mm	2400mm	2400mm
Maximum panel width	2150mm	2150mm	2150mm
Maximum panel weight	74kg	74kg	74kg
Maximum water rating	600Pa	600Pa	600Pa
Maximum wind rating	4500Pa ULS	4500Pa ULS	4500Pa ULS
Maximum glass thickness (single glazed)	12.76mm	12.76mm	12.76mm
Maximum glass thickness (double glazed)	24mm	24mm	24mm
Maximum acoustic rating	Rw37	Rw38	N/A
Maximum bushfire rating	BAL 40	BAL 40	BAL 40
Lowest U-value (single glazed)	5.0	5.5	N/A
Lowest U-value (double glazed)	3.3	3.8	N/A

Features & Benefits

Essential . Signature . Commercial

Lifestyle & Comfort

- Folding handles limit interference with window furnishings
- Top hinged design that allows air-flow even during light rain showers
- Safety-first design with no exposed sharp edges

Optional

- Openings can be restricted for upper storey windows
- Lockable handles for extra security

Design & Aesthetic

- Architectural symmetry with other Bradnam's windows and doors for a holistic look and feel
- 'Picture frame' look created with improved mitre joints
- Can be combined with fixed windows to create a design feature

Performance & Reliability

- Greater stability with sashes hung from a concealed heavy duty bar
- Minimum corrosion with stainless steel chains

Optional

- Effortless operation of large sashes using twin chain winders
- Save on energy bills and reduce outside noise with double glazing
- Bushfire rated – certified up to BAL 40

Premium Features

Signature & Commercial Only

- Oversize windows available
- Superior structural integrity with larger 100mm frame width

Commercial Only

- Can be glazed from the inside – ideal for multi-storey projects

Smart Solutions

High Performance Windows and Doors

Essential . Signature . Commercial

Building in today's environment demands the need to satisfy energy, acoustics, security and bushfire requirements. Bradnam's **Smart Solutions** range is designed to augment all Essential, Signature and Commercial products to satisfy these needs.

Some of the possible benefits

- Cooler in Summer
- Warmer in Winter
- Enhanced UV protection
- Reduce outside noise
- Save on energy bills

Performance comes from **more** than just glass

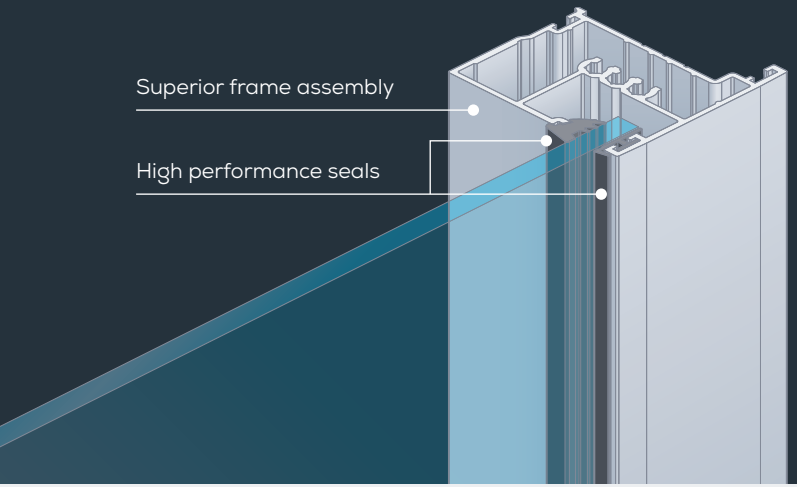

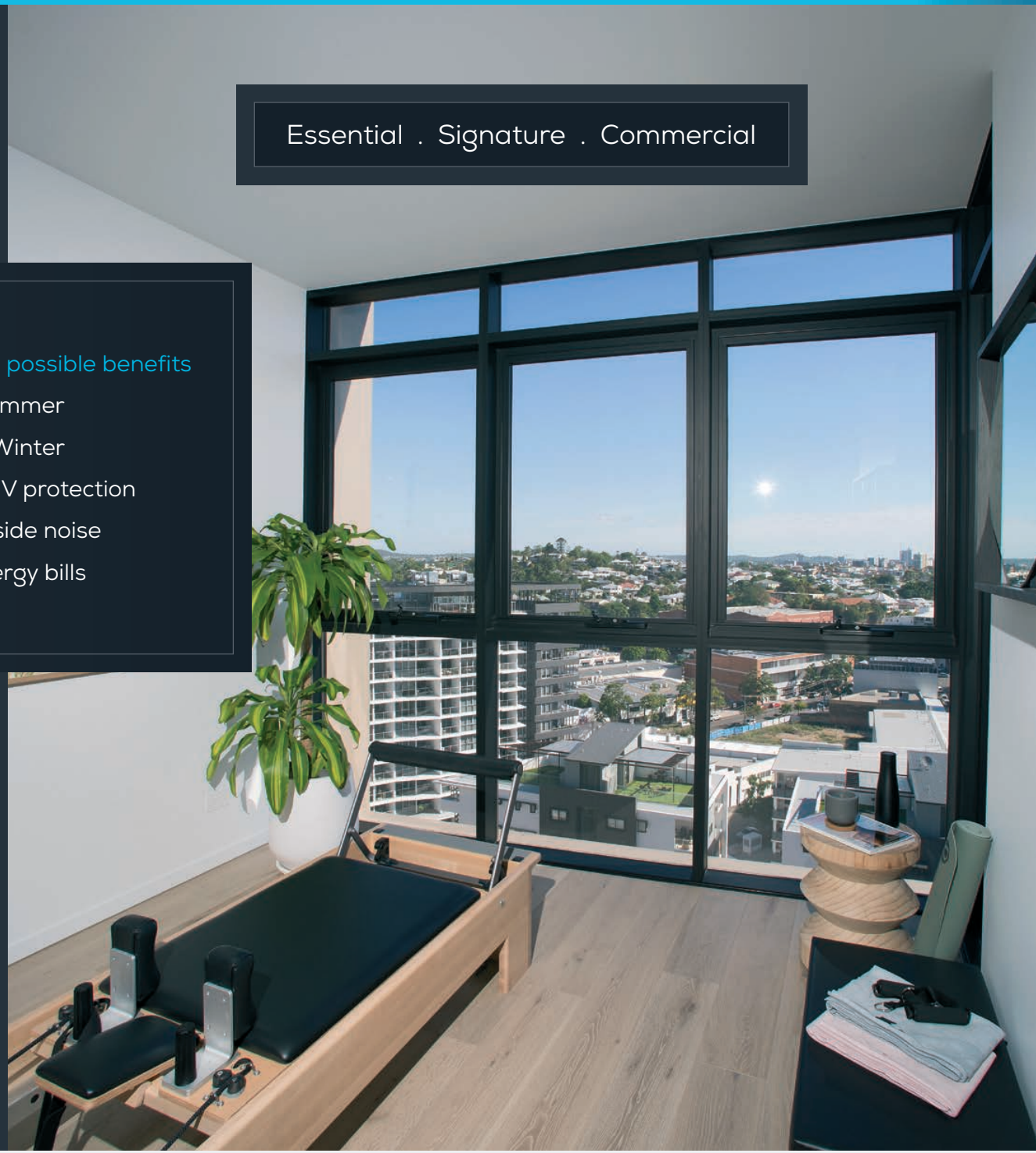

As the market leader in Australia for aluminium and glass building products, Bradnam's have developed its range of **Smart Solutions** to meet all high performance requirements.

Premium Smart Solution

Double Glazed

Year-round Comfort

- Acts as extra insulation by limiting the flow of hot or cold air in and out of your home
- Helps maintain comfortable temperatures inside across all seasons

Energy Reduction

- Reduce reliance on air conditioning and heaters – lowering electricity bills
- Consume less energy for a smaller carbon footprint

Noise Reduction

- Reduce outside noise – creating a quiet haven inside your home

Safety

- Extra strong resistance to unwanted attacks by intruders

Climate Control Solutions

Solar Comfort™

Year-round Comfort

- Designed to reflect heat away in summer and keep heat inside during winter
- Enjoy the ideal temperature in your home all year round – cooler in summer, warmer in winter

Energy Reduction

- Keep power bills down by reducing the need for additional heating and cooling
- Help save the environment by consuming less energy

Solar Block™

Cooler in Summer

- Minimise the flow of heat into your home – enjoy summer without feeling the heat
- Acts like a pair of sunglasses for your home, reducing glare by up to 78%

Energy Reduction

- Save on electricity bills by reducing the need for air conditioners
- Minimise your carbon footprint by consuming less energy

Specialty Solutions

Safety

Safety

- Effective, affordable barrier against forced entry
- Enjoy peace of mind knowing that your home has extra protection

Sound Smart™

Noise Reduction

- Reduce unwanted external noise – nearby traffic or noisy neighbours,

FlameShield™

Superior Bushfire Protection

- Meets Australian Standard AS3959:2009, which is aimed to reduce the risk of loss of life and property in bushfire prone areas

AWNING WINDOWS

Essential . Signature . Commercial

Warehouse Constructions

Hardware

The hardware displayed on this page are a guide only. Bradnam's recommend the viewing of an actual hardware product prior to order.

	Black Gloss	White	Ultra Silver
ESSENTIAL	•	•	•
SIGNATURE	•	•	•
COMMERCIAL	•	•	•

ESSENTIAL | SIGNATURE | COMMERCIAL

Handles can be folded to minimise interference with window furnishings

Locking indicator

Available in key-locking version only

Single chain winder

Twin chain winder

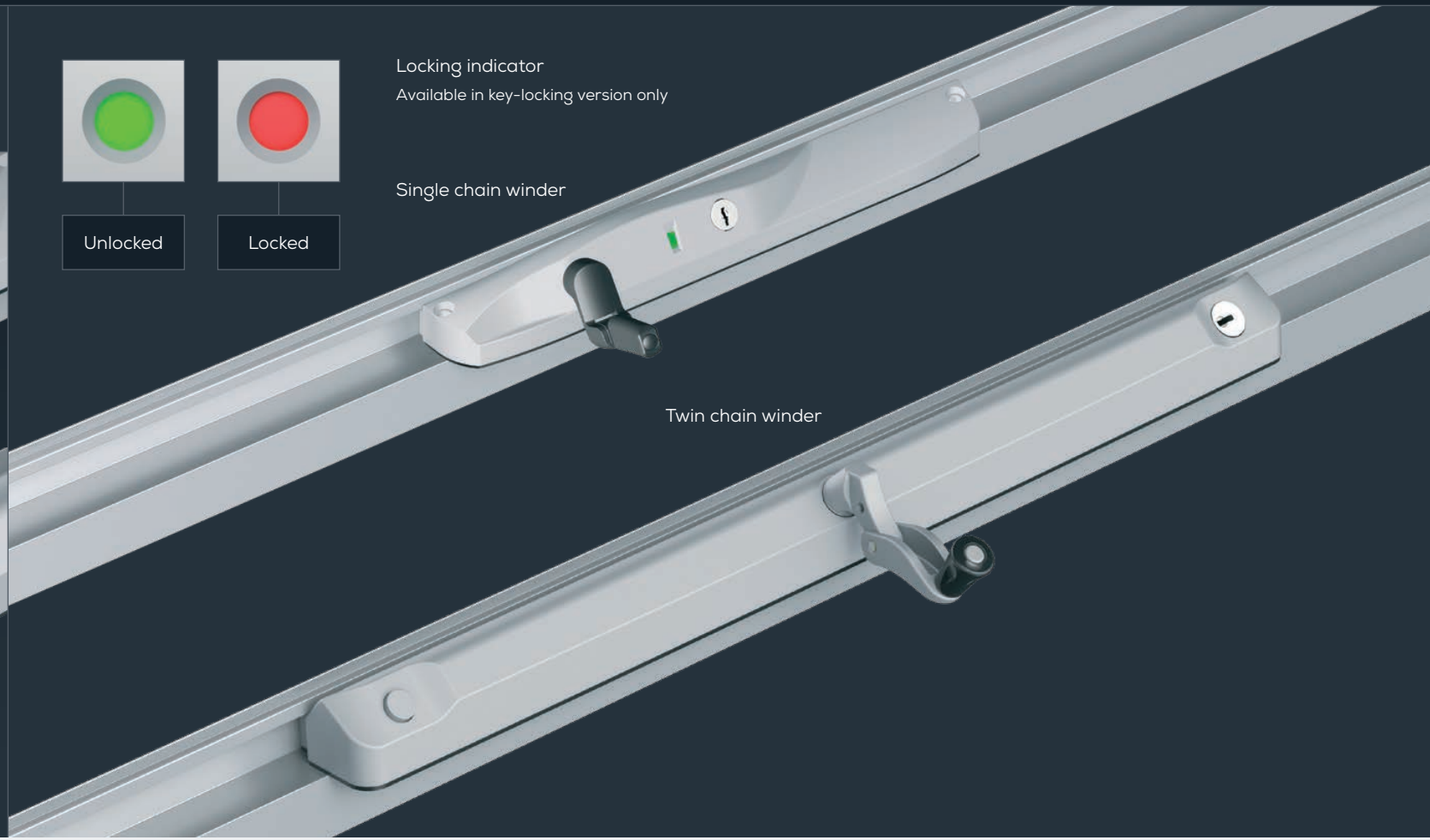

For more information contact
WUNDERBAR

PH: (02) 6057 8888

www.wunderbar.com.au

Email: sales@wunderbar.com.au

WINDOWS & DOORS

INSECT & SECURITY SCREENS

SHOWER SCREENS

MIRRORS & WARDROBES

GLASS SPLASHBACKS

Australian Owned & Made

Bradnam's products are proudly made in Australia and designed specifically to meet all Australian conditions.

Product availability, pricing, features, options, sizes, configurations and performance are subject to regional variations, design requirements and building codes.

Images are for illustration purposes only and may not accurately represent the product. Bradnam's Windows & Doors reserves the right to change, alter or delete any aspect of this product without notice. We recommend visiting a Bradnam's showroom before ordering to view colour swatches, glass samples and actual products.

HIA MEMBER

AWA AUSTRALIAN WINDOW ASSOCIATION

Heating Cooling WINDOW ENERGY RATING

Wunderbar . QBCC Act lic 58885

© Bradnam's Windows and Doors . v2 May 2019